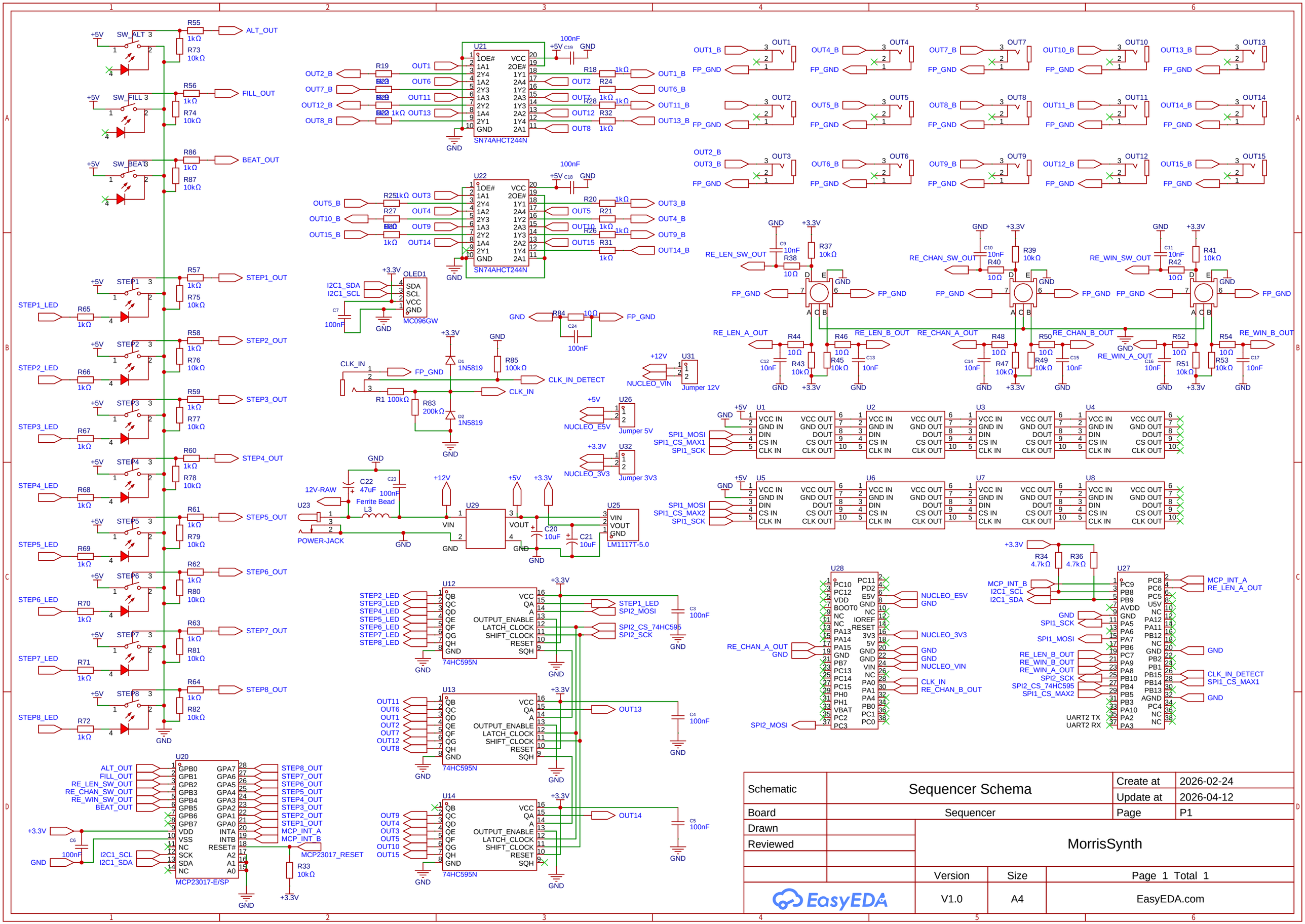
SW_ALT
SW_FILL
SW_BEAT
ALT_OUT
FILL_OUT
BEAT_OUT
STEP1_OUT
STEP2_OUT
STEP3_OUT
STEP4_OUT
STEP5_OUT
STEP6_OUT
STEP7_OUT
STEP8_OUT
STEP1_LED
STEP2_LED
STEP3_LED
STEP4_LED
STEP5_LED
STEP6_LED
STEP7_LED
STEP8_LED
U21
U22
SN74AHCT244N
OLED1
MC096GW
I2C1_SDA
I2C1_SCL
CLK_IN
CLK_IN_DETECT
NUCLEO_VIN
Jumper 12V
NUCLEO_E5V
Jumper 5V
NUCLEO_3V3
Jumper 3V3
12V-RAW
POWER-JACK
Ferrite Bead
LM1117T-5.0
U12
U13
U14
74HC595N
U20
MCP23017-E/SP
MCP23017_RESET
MCP_INT_A
MCP_INT_B
RE_LEN_SW_OUT
RE_CHAN_SW_OUT
RE_WIN_SW_OUT
RE_LEN_A_OUT
RE_LEN_B_OUT
RE_CHAN_A_OUT
RE_CHAN_B_OUT
RE_WIN_A_OUT
RE_WIN_B_OUT
SPI1_MOSI
SPI1_CS_MAX1
SPI1_SCK
U1
U2
U3
U4
U5
U6
U7
U8
U28
U27
SPI2_MOSI
SPI2_SCK
SPI2_CS_74HC595
SPI1_CS_MAX2
UART2 TX
UART2 RX
Schematic
Sequencer Schema
Create at
2026-02-24
Update at
2026-04-12
Board
Sequencer
Page
P1
Drawn
Reviewed
MorrisSynth
Version
Size
Page 1 Total 1
V1.0
A4
EasyEDA.com